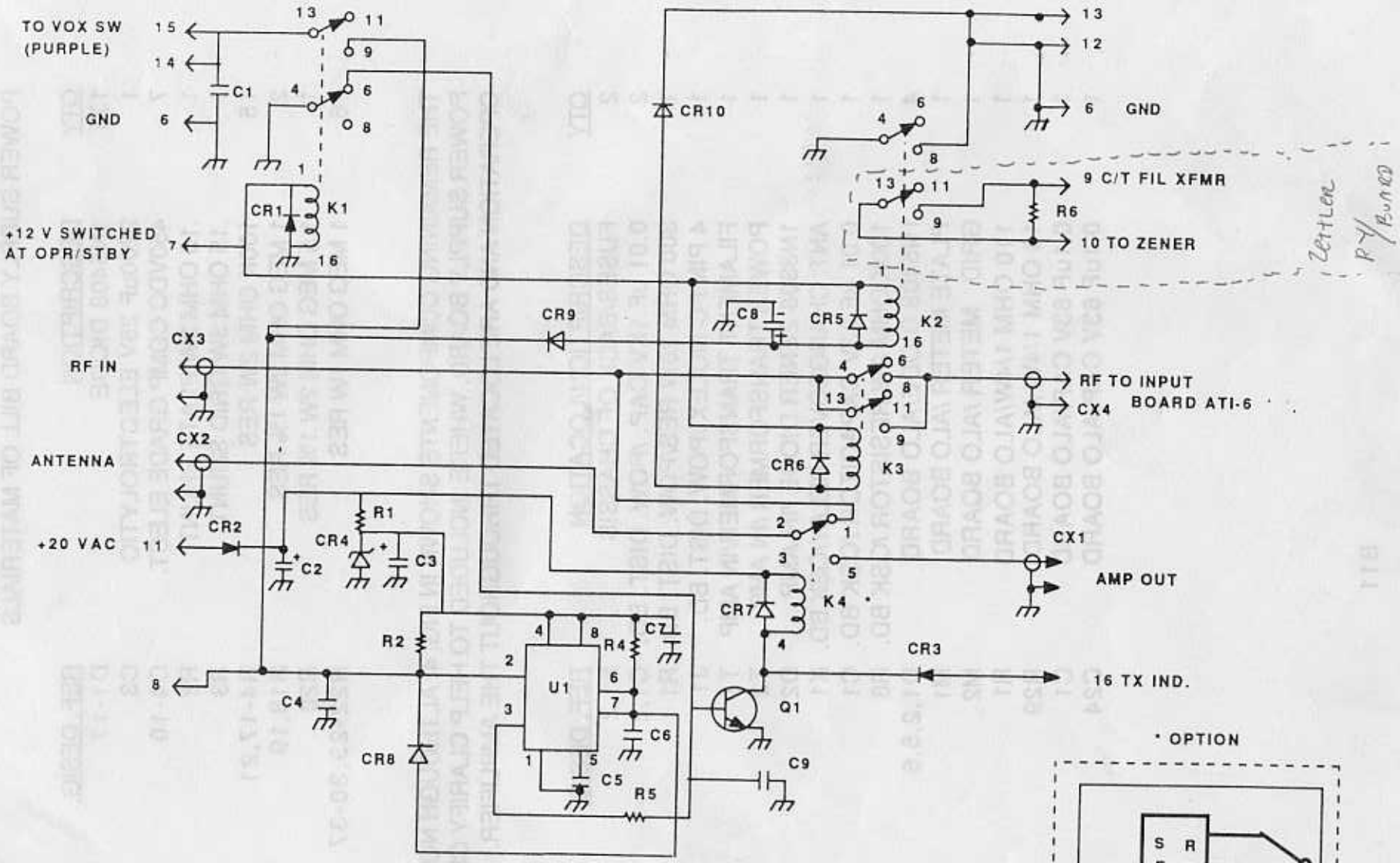


FIGURE B-6 QSK BOARD